SEVAFRESH

Vidima®

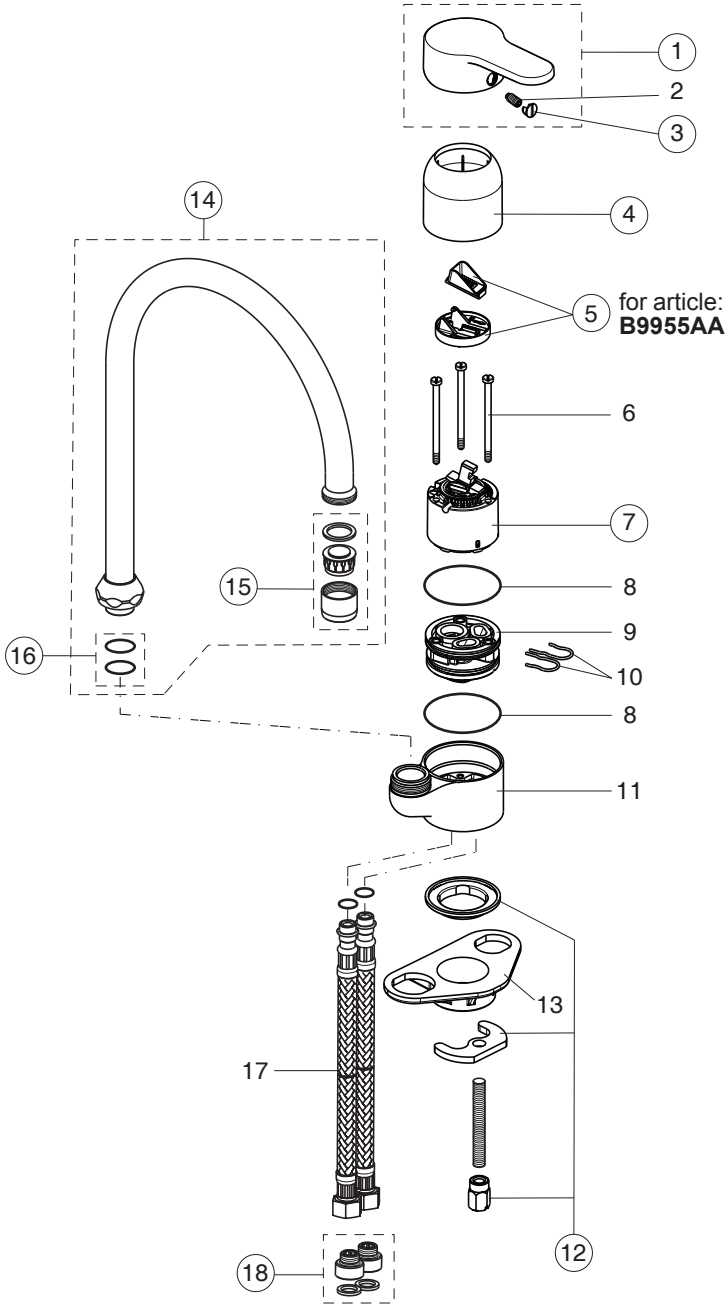

B0422AA
B9955AA

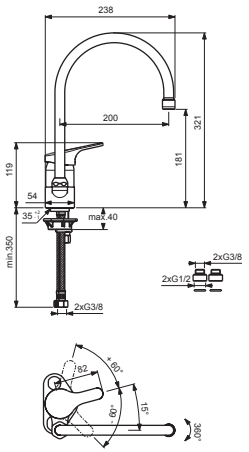

Pos.	Signify	Spare parts-Nr.	Quantity	Pos.	Signify	Spare parts-Nr.	Quantity
1	Lever,w/logo	B960984AA	1 Pcs.	14	Tub.spout R200-compl.	A964530AA	1 Set
2	Screw M5x10		1 Pcs.	15	Perlator M22x1	B964945AA	1 Pcs.
3	Cap(Blue/Red)	B960426NU	1 Pcs.	16	O-Ring Ø13x2.5	B960417NU	2 Pcs.
4	Cap	B960433AA	1 Pcs.	17	Flex hose G3/8-Ø10.5		2 Pcs.
5	Volume stop	A860700NU	1 Pcs.		L445mm		
6	Screw M4x62		3 Pcs.	18	Nipple G3/8-G1/2-compl.	B961063NU	1 Set
7	Cartridge Ø47mm	A960500NU	1 Pcs.				
8	Manifold		1 Pcs.				
9	O-Ring Ø44x2		2 Pcs.				
10	Clip		2 Pcs.				
11	Body kitchen		1 Pcs.				
12	Fixation set	B960232NU	1 Set				
13	U plate support bracket fixing kit		1 Pcs.				