Tonic II A6339..

Produced from: March 2015

Pre-installation Kit 1 - Easy Box **A1000NU**

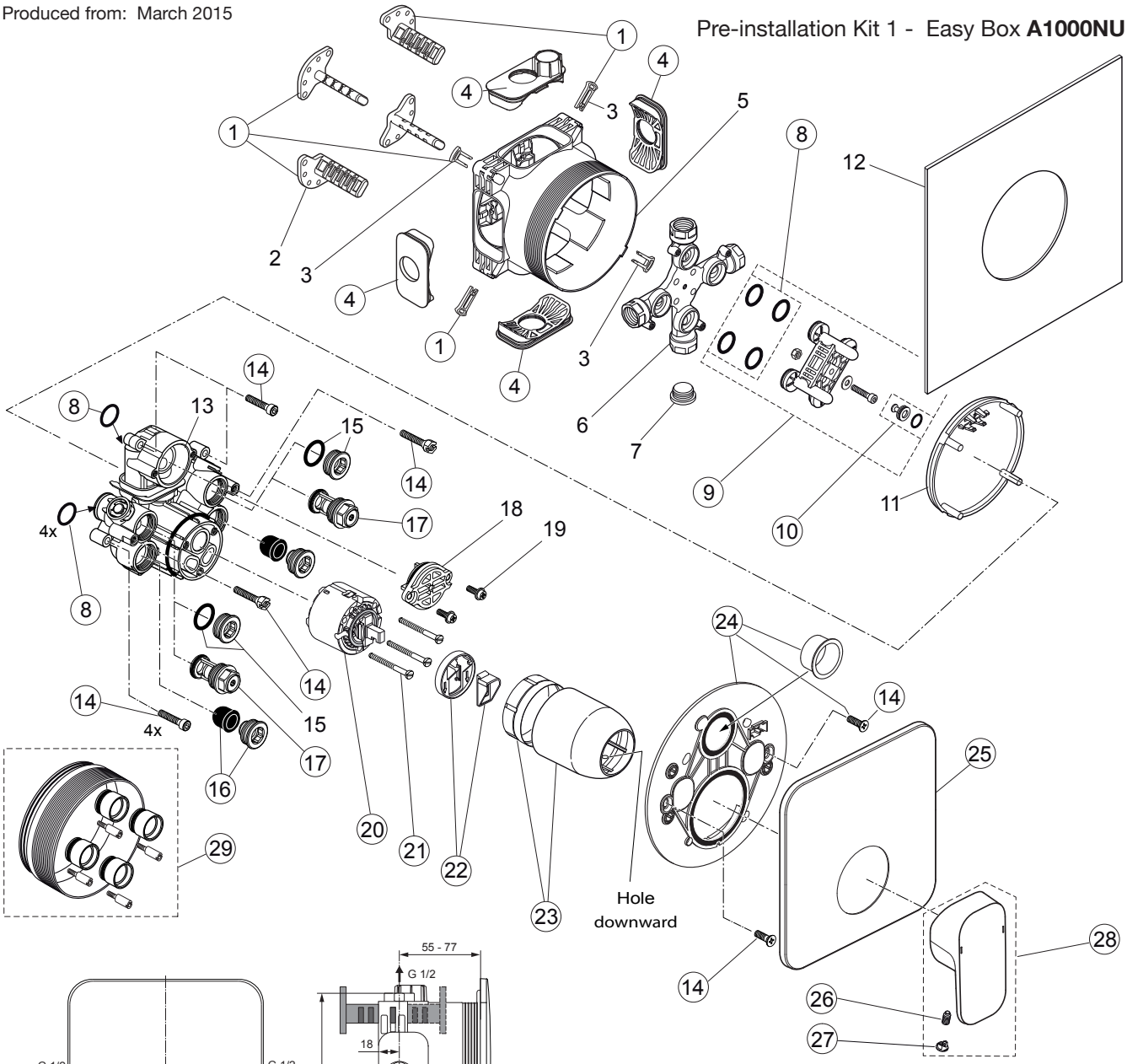

Body and Designparts Kit 2 - **A6339AA**

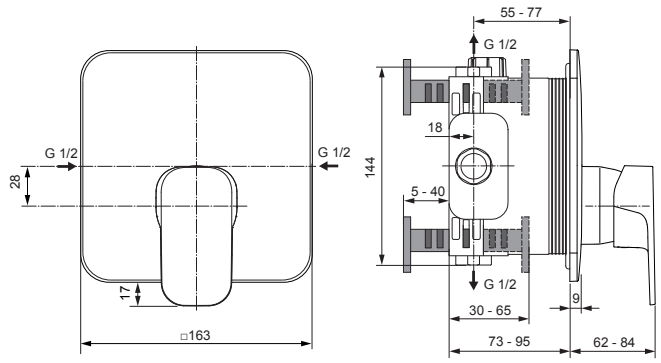

Pos.	Description	Part-Number	Qty.
1	Install. depth adjust. + pos.3	**A 963 131 NU**	1 Set
2	Depth adjustment device		
3	Adjustment lock (contained in pos. 1)		
4	Side sealing	**A 963 132 NU**	1 Set
5	Built-in box		
6	Multi-way body		
7	Plug G1/2		
8	O-ring Ø 17 x 2,5	**A 963 143 NU**	1 Set
9	Flushing device cpl.	**A 963 146 NU**	1 Set
10	Plug with o-ring Ø 12x1,5	**A 963 147 NU**	1 pcs
11	Cover for built-in box		
12	Sealing fleece		
13	Body Single lever		
14	Screw set complete	**A 960 890 NU***	1 Set
15	Plug with o-ring		
16	Low noise insert	**A 960 891 NU**	1 pcs

Pos.	Description	Part-Number	Qty.
17	Stop valve	**A 960 706 NU**	2 pcs
18	Front cover with o-ring		
19	Screw M4x12		
20	Cartridge with pos.22	**A 960 500 NU**	1 pcs
21	Cylindrical screw M4x41,7	**A 963 335 NU**	3 pcs
22	ECO-kit	**A 860 700 NU**	1 Set
23	Cover + clamping + O-ring	**A 960 893 AA**	1 Set
24	Escutcheon holder compl.	**A 860 897 NU**	1 Set
25	Escutcheon B/S plane	**A 860 898 AA**	1 pcs
26	Thread pin M5x10 DIN915	**A 963 309 NU**	1 pcs
27	Cap for handle	**B 960 473 AA**	1 pcs
28	Lever compl. with Logo ISI	**A 860 896 AA**	1 Set
29	Extension kit 20mm	**A 960 704 NU**	1 Set
	Extension kit 40mm	**A 962 476 NU**	1 Set

**Universal set (not all parts needed)*