Concept Air A7063.. A7064..

Produced since: **Aug. 2017**

SL basin mixer flex. hose
with pop-up waste
chrome **A7063AA**

without pop-up waste
chrome **A7064AA**

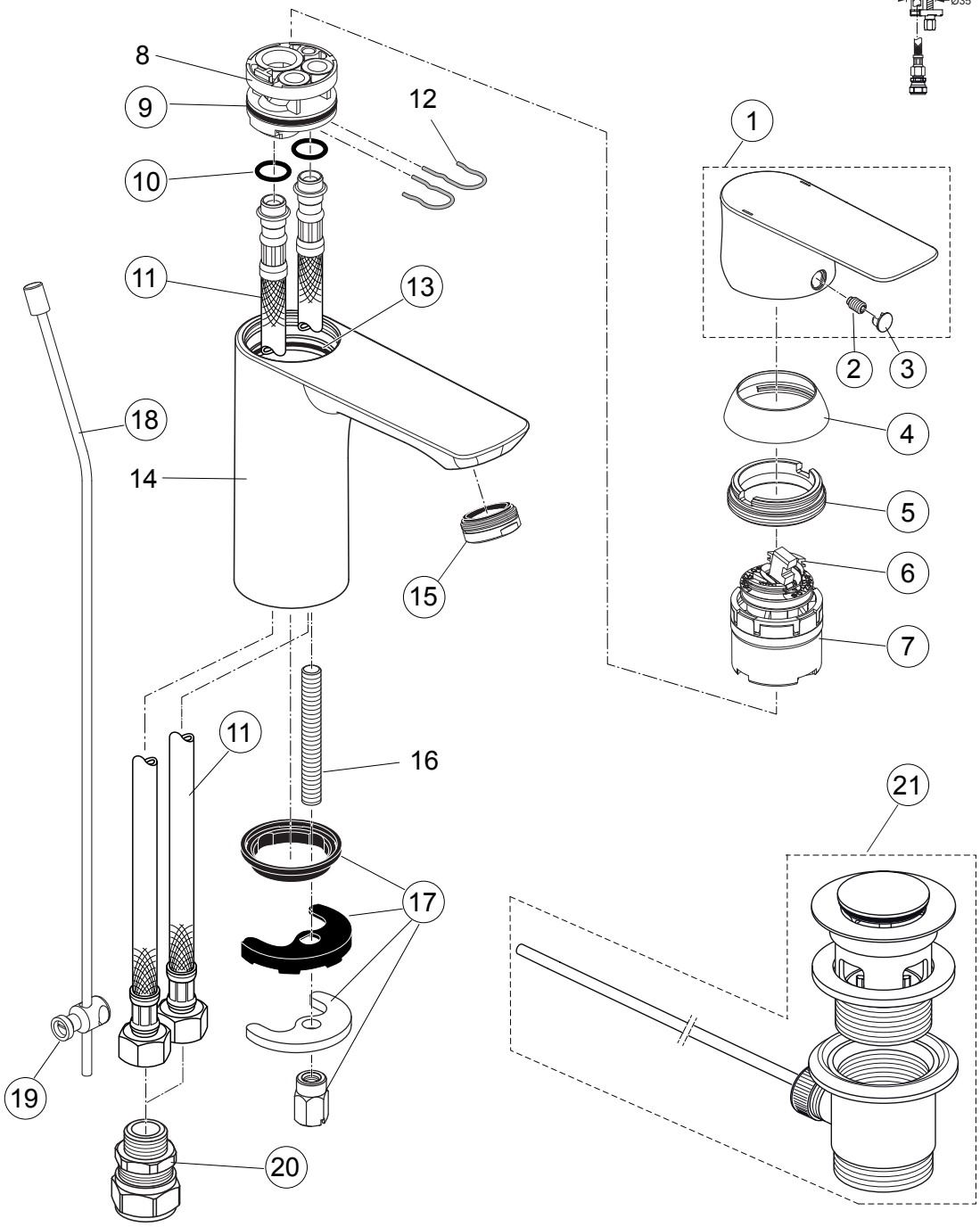

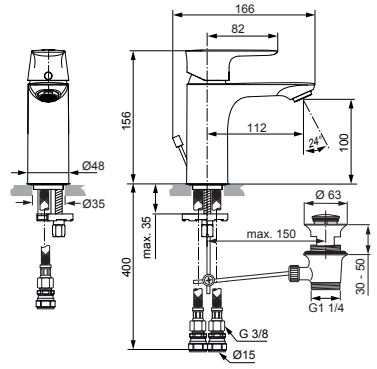

Pos.	Description	Part-Number	Qty.
1	Lever cpl. w. Logo ISI	**A 861 230 AA**	1 Set
2	Thread pin M5x5 DIN916	**A 963 309 NU**	1 Set
3	Handle plug	**B 860 473 AA**	1 pcs
4	Cover cap	**B 961 373 AA**	1 pcs
5	Thread ring M36x1 + Key	**B 961 374 NU**	1 pcs
6	Hot limit stop	**A 861 181 NU**	1 pcs
7	Cartridge Ø38 + Pos.13,+ Key	**A 861 156 NU***	1 Set
8	Manifold		
9	O - Ring Ø 34 x 2	**A 960 183 NU**	2 pcs
10	O - Ring Ø 9,5 x 2,5	**F 961 122 NU**	3 pcs
11	Flex. hose Ø10,5-G3/8-445	**A 962 359 NU**	1 pcs
12	Clip		

Pos.	Description	Part-Number	Qty.
13	O - Ring Ø 38 x 2,5	**E 960 059 NU***	1 Set
14	Body		
15	Aerator M24x1 - 5ltr/min	**B 961 383 AA**	1 pcs
	Areator M24x1 full flow	**A 961 625 AA**	1 pcs
16	Bolt M8x63		
17	Fixation kit	**A 964 520 NU***	1 Set
18	Lift rod cpl. + Pos. 19	**A 861 210 AA**	1 Set
19	Bracket	**A 961 172 NU**	1 pcs
20	Connector G3/8 D15	**B 960 845 NU**	2 pcs
21	Pop-up waste complete	**B 960 853 AA**	1 Set

**Universal set (not all parts needed)*