Produced from: **Oct. 2017**

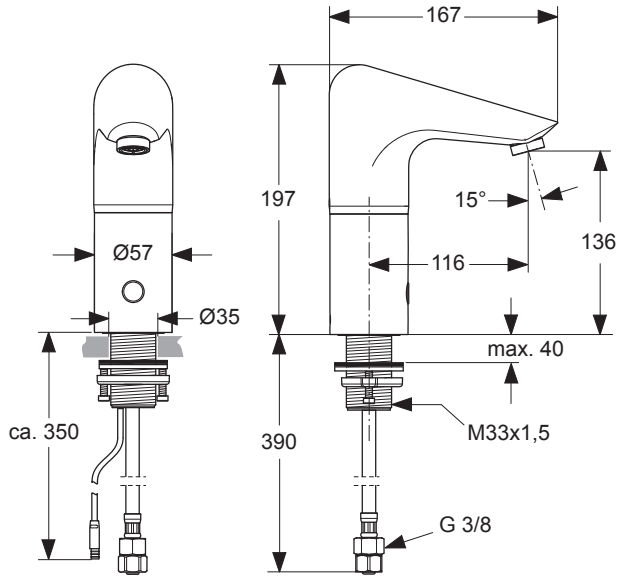

Basin Spout Electronic
with Battery
chrome **A4151AA**

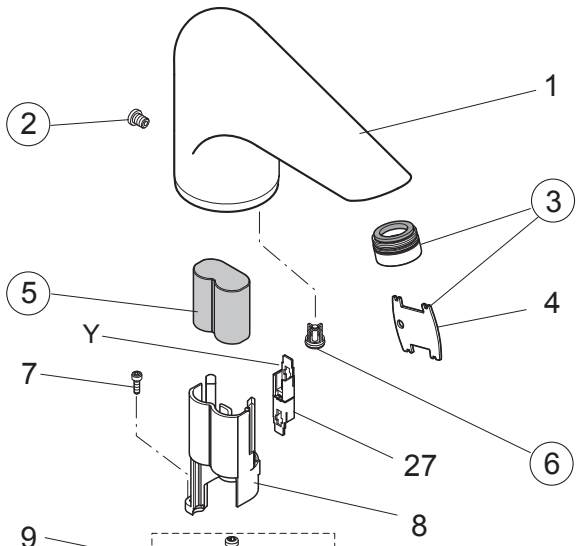

Basin Spout Electronic
with 230V Power Supply
chrome **A4153AA**

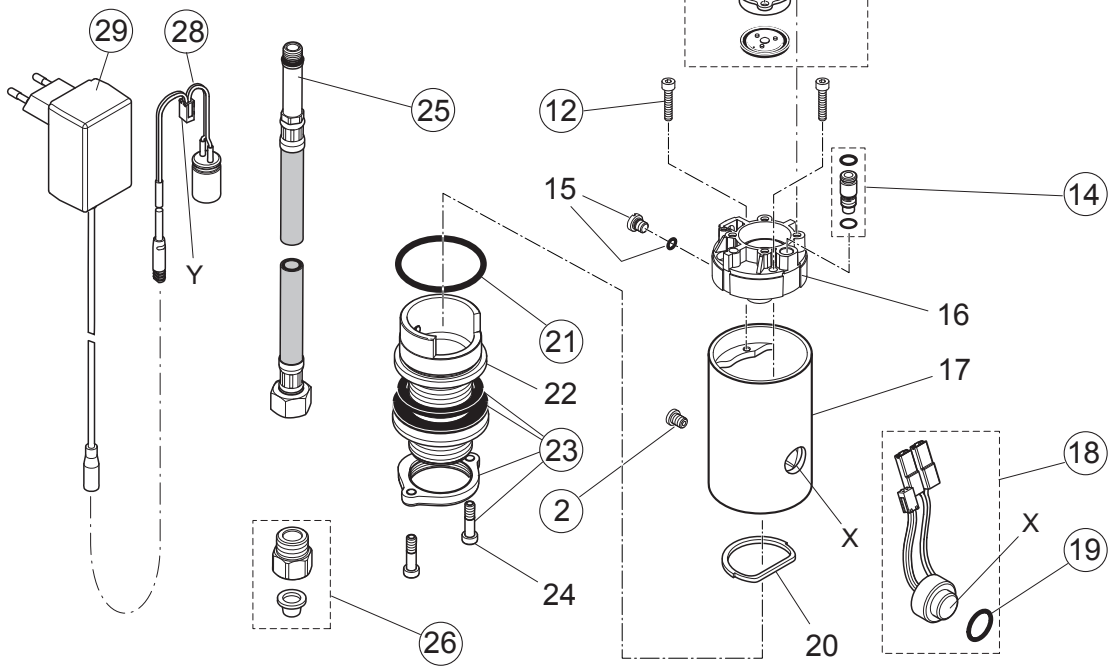

Pos.	Description	Part-Number	Qty.
1	Body (Electr. spout)		
2	Set screw M6	**A 960 201 AA**	1 pcs
3	Aerator M24x1 complete	**B 960 457 AA**	1 pcs
4	Aerator key		
5	Battery 6V CR-P2	**A 960 161 NU**	1pcs
6	Non-return valve	**A 962 099 NU**	1 pcs
7	Cylindrical screw M3x10 DIN912		
8	Battery holder		
9	Cylindrical screw M4x6	**A 963 103 NU**	2 pcs
10	Magnet valve + Pos.9	**A 960 151 NU**	1 pcs
12	Cylindrcal screw M4x20	**A 963 544 NU**	4 pcs
14	Nipple M8x1 complete	**A 962 214 NU**	1 pcs
15	Set screw w. O-Ring Ø5x1		
16	Body (magnet valve)		
17	Extension spout		

Pos.	Description	Part-Number	Qty.
18	Sensor complete + Pos.19	**A 861 344 NU**	1 pcs
19	O - Ring Ø 15,6 x 1,78	**A 861 344 NU**	2 pcs
20	Sensor holder (tin)		
21	O - Ring Ø 36 x 2	**A 961 335 NU**	1 pcs
22	Shaft M33 x 1,5		
23	Fixation-Set Universal	**A 960 486 NU**	1 Set
24	Cylindrical Screw M5 x 20 DIN7985		
25	Flex. hose M10x1-G3/8	**A 963 600 NU**	1 pcs
26	Non-return valve complete	**A 962 215 AA**	1 pcs
27	Adapter (for A4153AA only)		
28	Cable plug (f. A4153AA)	**A 962 216 NU**	1 pcs
29	Power supply / Input 100 - 240V AC / 50 - 60Hz Output 6,5V DC / 1A	**A 962 217 NU**	1 pcs

Produced from: **Febr. 2008 - Sep. 2017**

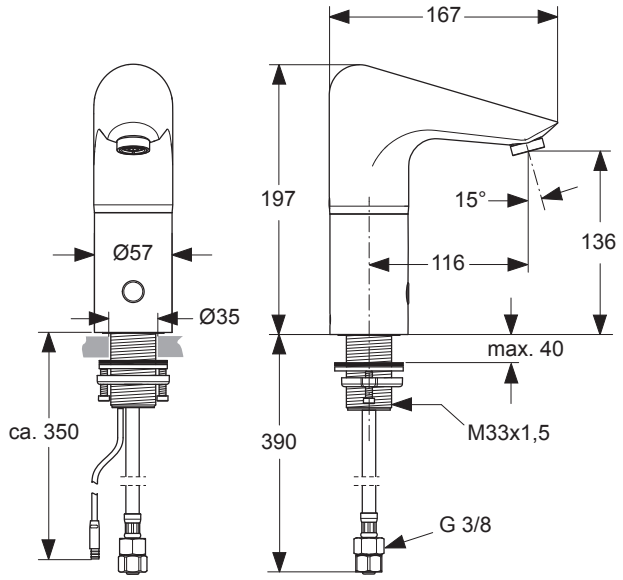

Basin Spout Electronic
with Battery
chrome **A4151AA**

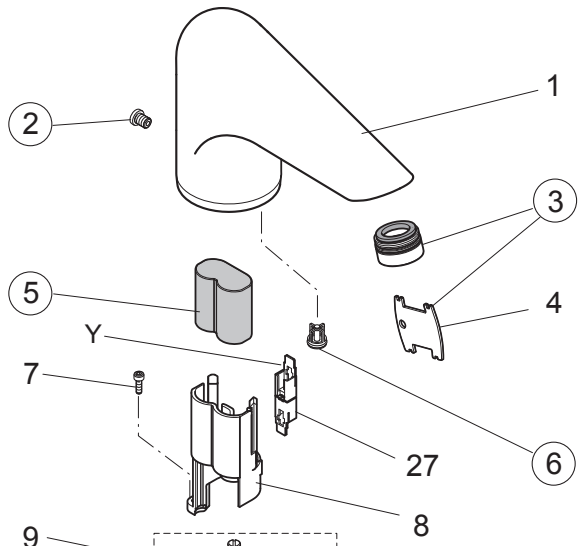

Basin Spout Electronic
with 230V Power Supply
chrome **A4153AA**

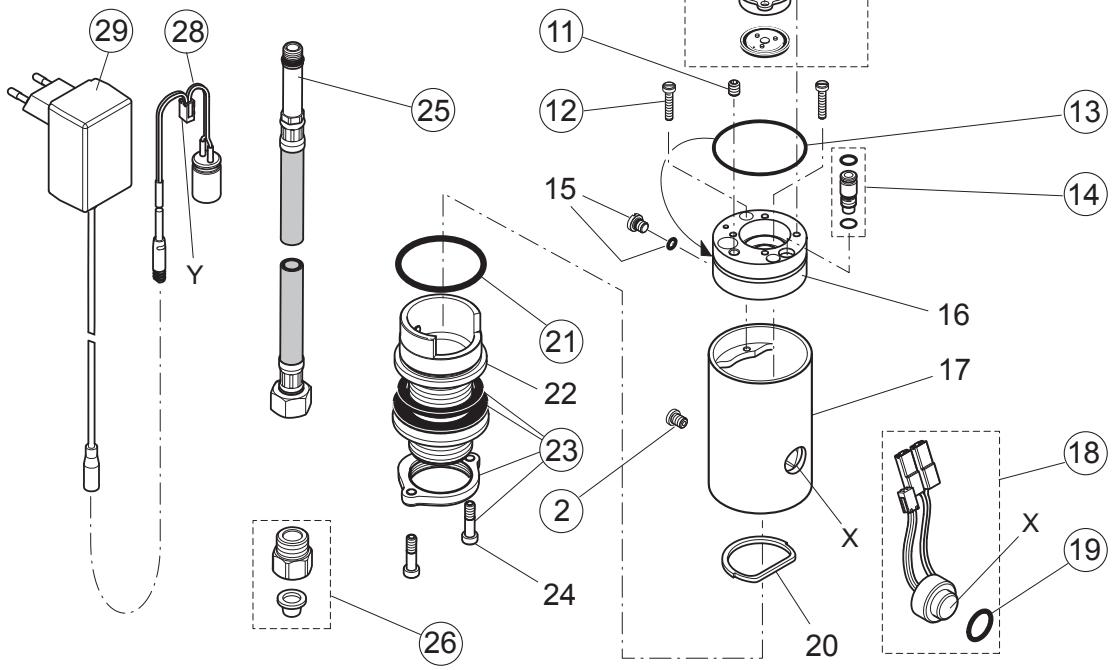

Pos.	Description	Part-Number	Qty.
1	Body (Electr. spout)		
2	Set screw M6	**A 960 201 AA**	1 pcs
3	Aerator M24x1 complete	**B 960 457 AA**	1 pcs
4	Aerator key		
5	Battery 6V CR-P2	**A 960 161 NU**	1pcs
6	Non-return valve	**A 962 099 NU**	1 pcs
7	Cylindrical screw M3x10 DIN912		
8	Battery holder		
9	Cylindrical screw M4x6	**A 963 103 NU**	2 pcs
10	Magnet valve + Pos.9	**A 960 151 NU**	1 pcs
11	Thread pin M6x8 DIN913	**A 963 752 NU**	2 pcs
12	Cylindrcal screw M4x20	**A 963 544 NU**	4 pcs
13	O - Ring Ø 46 x 1	**A 962 213 NU**	1 pcs
14	Nipple M8x1 complete	**A 962 214 NU**	1 pcs
15	Set screw w. O-Ring Ø5x1		

Pos.	Description	Part-Number	Qty.
16	Body (magnet valve)		
17	Extension spout		
18	Sensor complete + Pos.19	**A 861 344 NU**	1 pcs
19	O - Ring Ø 15,6 x 1,78	**A 861 344 NU**	2 pcs
20	Sensor holder (tin)		
21	O - Ring Ø 36 x 2	**A 961 335 NU**	1 pcs
22	Shaft M33 x 1,5		
23	Fixation-Set Universal	**A 960 486 NU**	1 Set
24	Cylindrical Screw M5 x 20 DIN7985		
25	Flex. hose M10x1-G3/8	**A 963 600 NU**	1 pcs
26	Non-return valve complete	**A 962 215 AA**	1 pcs
27	Adapter (for A4153AA only)		
28	Cable plug (f. A4153AA)	**A 962 216 NU**	1 pcs
29	Power supply / Input 100 - 240V AC / 50 - 60Hz Output 6,5V DC / 1A	**A 962 217 NU**	1 pcs