Attitude A4600.. A4601..

Produced from: April 2009

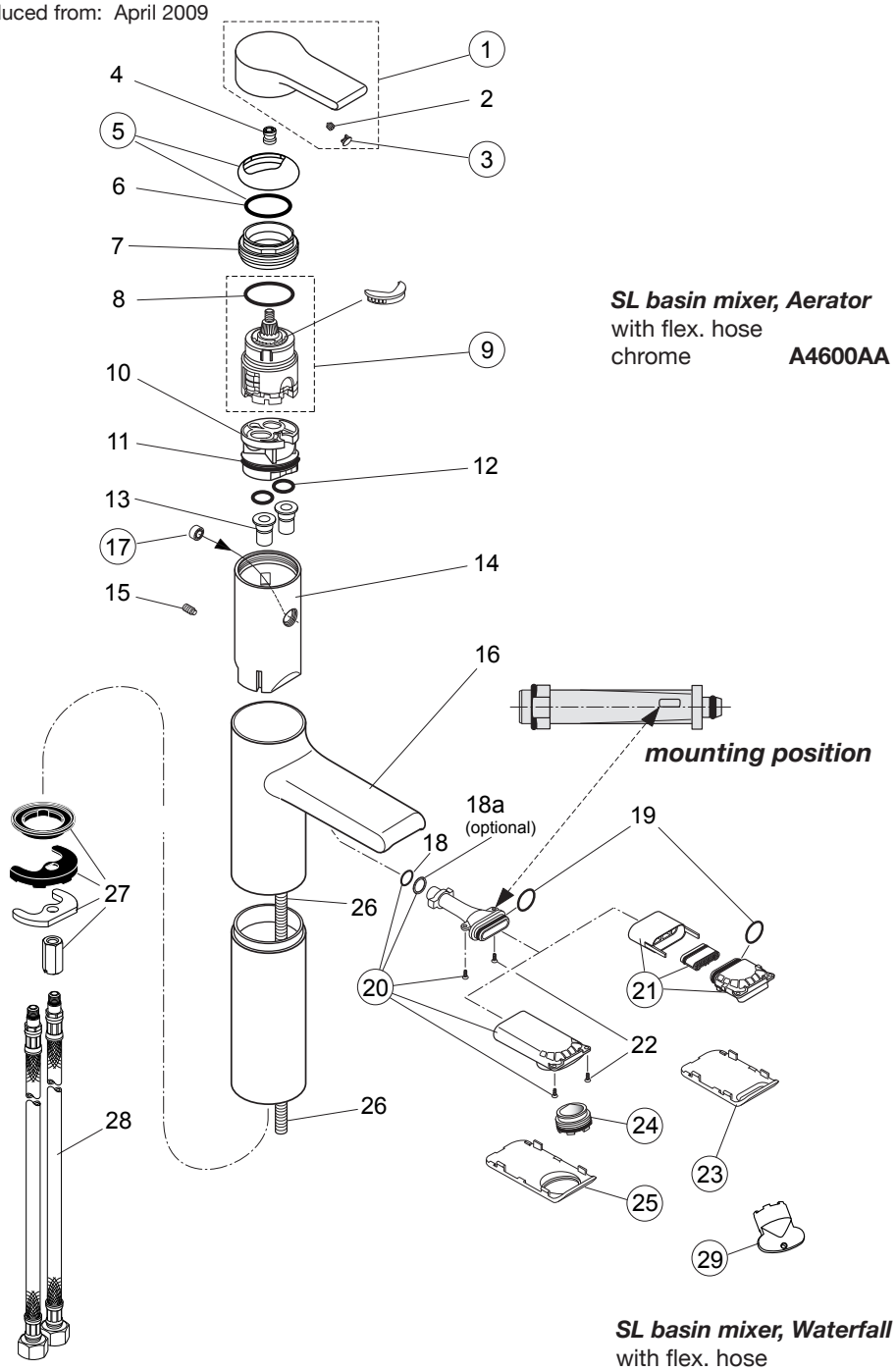

SL basin mixer, Aerator
with flex. hose
chrome **A4600AA**

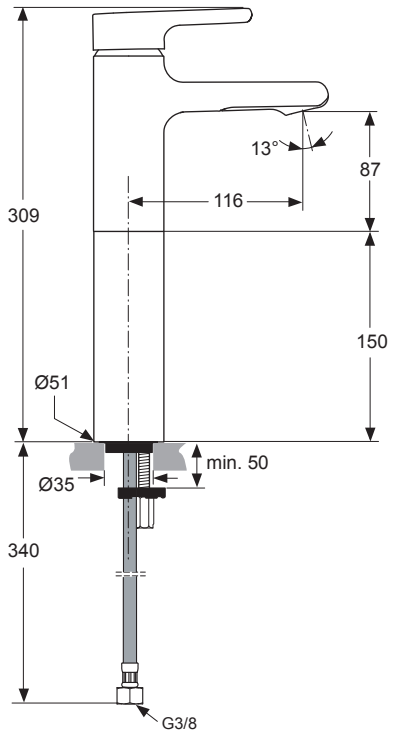

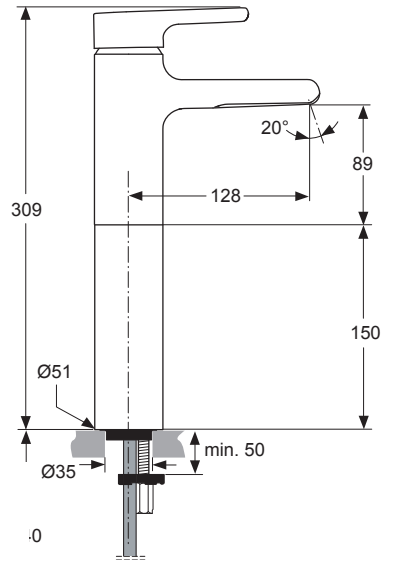

SL basin mixer, Waterfall
with flex. hose
chrome **A4601AA**

Pos.	Description	Part-Number	Qty.
1	Lever cpl. with Logo IS	**A 960 645 AA**	1 pcs
2	Thread pin M5x6 DIN914		
3	Handle cap	**B 960 473 AA**	1 pcs
4	Handle adapter		
5	Cover cap	**A 960 646 AA**	1 pcs
6	O -ring Ø 28,3 x 1,78		
7	Clamping nut M43 x 1,5		
8	O - Ring Ø 35 x 3,2		
9	Cartridge Multiport Click	**A 962 985 NU**	1 pcs
	Cartridge (only waterfall)	**A 962 716 NU**	1 pcs
10	Plastic manifold		
11	O - ring Ø 34,65 x 1,78		
12	O - ring Ø 10 x 2		
13	Adapter flex. hose		
14	Cartridge holder		
15	Thread pin M5x16 DIN 914		

Pos.	Description	Part-Number	Qty.
16	Body (Lavy + Bidet)		
17	Flow limiter (waterfall only)	**A 960 647 NU**	1 pcs
18	O - ring Ø 9,25 x 1,78 (until 2014) (from 2015 Ø 9,1 x 1,6)		
19	O - ring Ø 18 x 1,5		
20	Water outlet f. aerator	**A 960 649 NU***	1 Set
21	Water outlet f. waterfall	**A 960 650 NU***	1 pcs
22	Screw Ejot WN5152 20x5		
23	Cover plate waterfall	**A 960 651 AA**	1 pcs
24	Aerator M24x1 Casc. -A-	**A 962 470 NU**	1 pcs
25	Coverplate aerator	**A 960 653 AA**	1 pcs
26	Stud M8 x 270mm		
27	Fixation set		
28	Flex. hose M8x1-G3/8 x 550mm		
29	Key for aerator pos. 24	**A 960 196 NU**	1 pcs

*from 2015 w. Pos.18a (optional); water outlet removed in Pos.20 + Pos.21