ALTO ECOTHERM A5639..

Produced from: **July 2010**

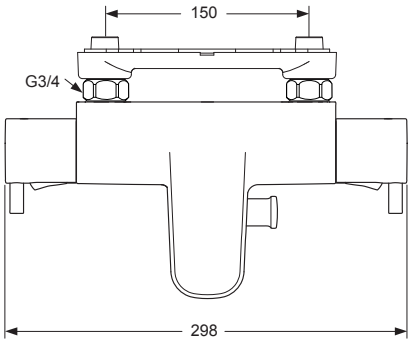

Bath/Shower Thermostat
chrome **A5639AA**

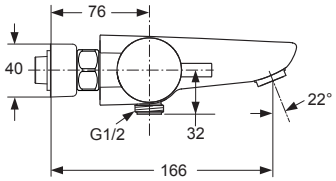

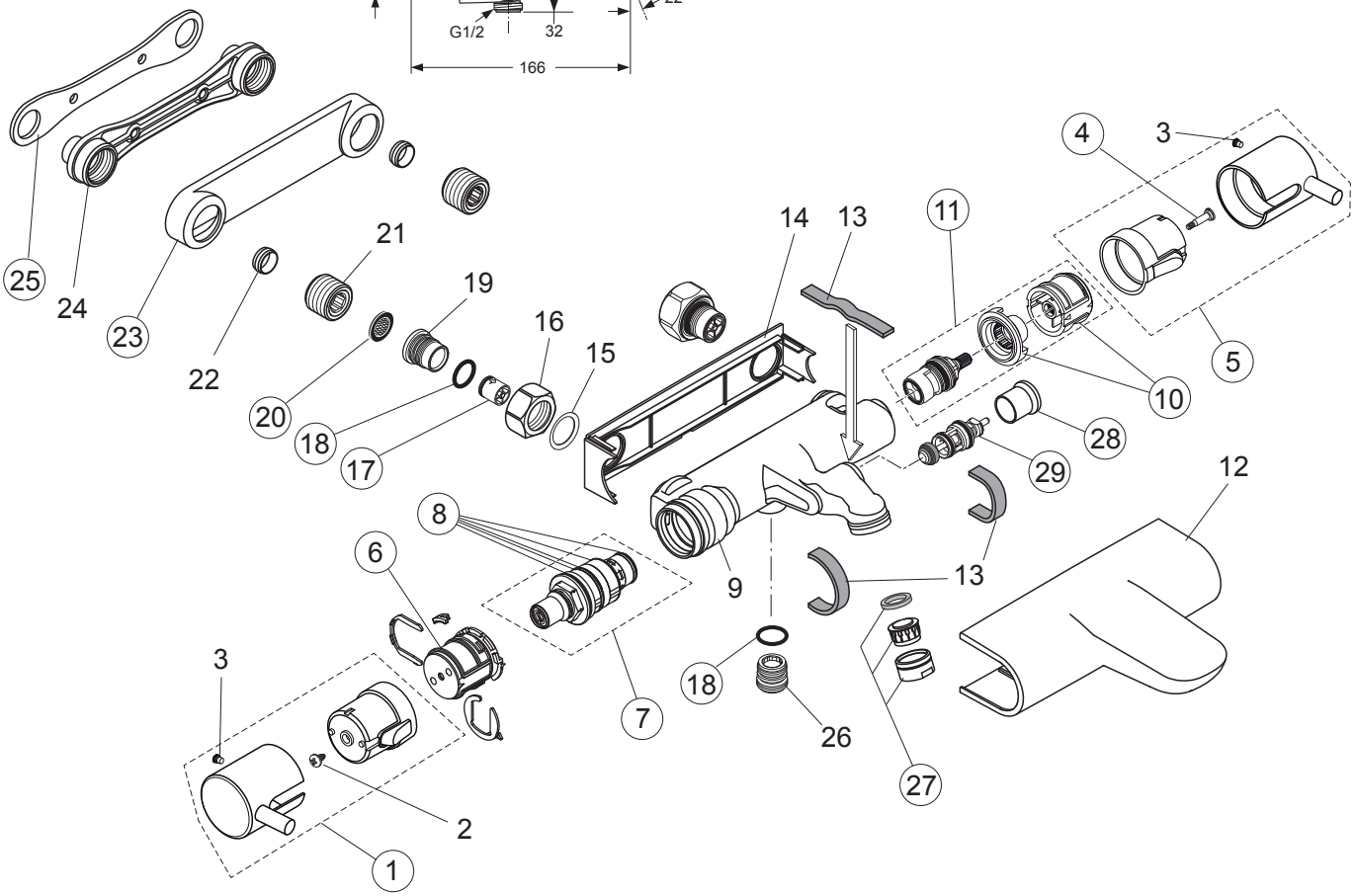

Pos.	Description	Part-Number	Qty.
1	Handle for temp. cpl.	**A 963 099 AA**	1 pcs
2	Screw Ejot PT KB50x10		
3	Screw (spigot)		
4	Screw M4 L=23,5	**A 962 998 NU**	2 pcs
5	Handle for Volume control	**A 960 801 AA**	1 pcs
6	Temp. adjustment compl.	**A 963 427 NU**	1 Set
7	Thermostatic Cartridge	**A 962 229 NU**	1 pcs
8	Repair-Set Cartridge	**A 962 230 NU**	1 Set
9	Body for Bath/shower		
10	Handle insert + stopring	**A 963 432 NU***	1 Set
11	Cartridge G1/2	**A 861 243 NU**	1 pcs
12	Cover for B/S 150mm		
13	Sealing stripes		
14	Back plate (frame)		
15	Ring (Clip)		
16	Coupling nut G3/4 - SW30		

Pos.	Description	Part-Number	Qty.
17	Non-return valve DW15	**A 962 594 NU**	2 pcs
18	O - ring Ø 17 x 2	**A 961 810 NU**	2 pcs
19	Seat M20 x 1 left thread		
20	Fibre / Filter Ø24x15x2,4	**A 962 595 NU**	2 pcs
21	Connector G3/4		
22	Compression ring		
23	Shroud f. wall mounted kit	**B 960 722 AA**	2 pcs
24	Brass wall plate		
25	Gasket	**B 960 721 NU**	1 pcs
26	Nipple G1/2 for shower		
27	Aerator M24x1 -C-	**A 961 132 AA**	1 pcs
28	Pull knob	**A 963 537 AA**	1 pcs
29	Diverter complete	**A 960 575 AA**	1 pcs

** Universal-Set (not all parts needed)*