SCORPIO

Vidima®

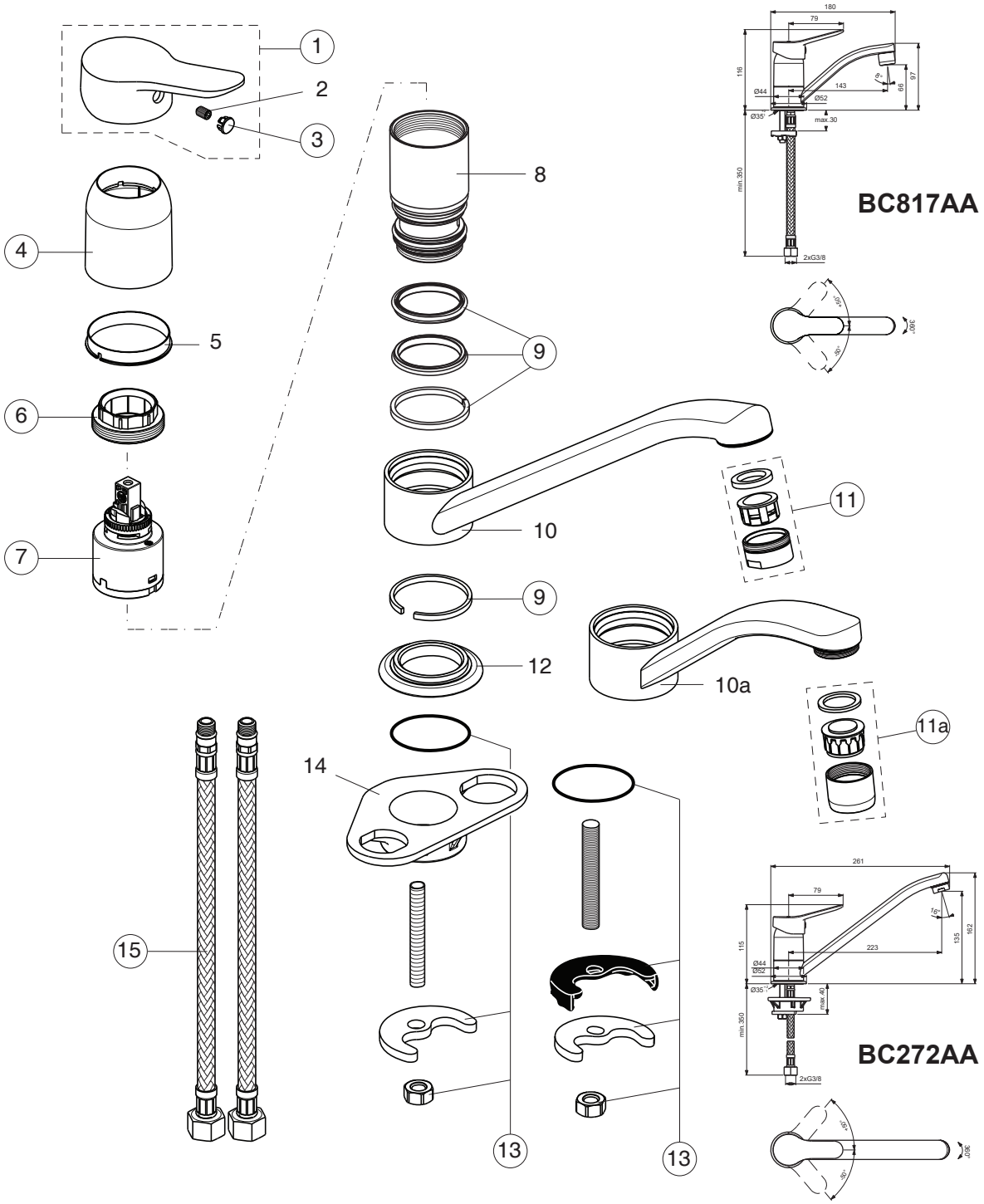

Pos.	Signify	Spare parts-Nr.	Quantity	Pos.	Signify	Spare parts-Nr.	Quantity
1	Lever,w/logo-set	B961483AA	1 Pcs.	14	U plate support		1 Pcs.
2	Screw M5x8		1 Pcs.		bracket fixing kit		
3	Indicator cap	B964696NU	1 Pcs.	15	Flex pexhose G3/8	A963600NU	1 Pcs.
4	Escutcheon	B961211AA	1 Pcs.		M10x1/L445mm		
5	Support ring		1 Pcs.		Flex hose G3/8-	B960535NU	1 Pcs.
6	Screw M37x1.5	B964698NU	1 Pcs.		M10x1/8x12/L400 (for BC817AA)		
7	Cartridge Ø35mm	B961477NU	1 Pcs.				
8;8a	Body diverter kitchen		1 Pcs.				
9	Sealing set	B961603NU	1 Pcs.				
10	Body-spout		1 Pcs.				
11	Casc.perlator M24x1-B	A960932AA	1 Pcs.				
11a	Perlator M22x1-B	B964945AA	1 Pcs.				
12	Rosette decorative		1 Pcs.				
13	Fixation kit	B964702NU	1 Set				