CALISTA

Vidima®

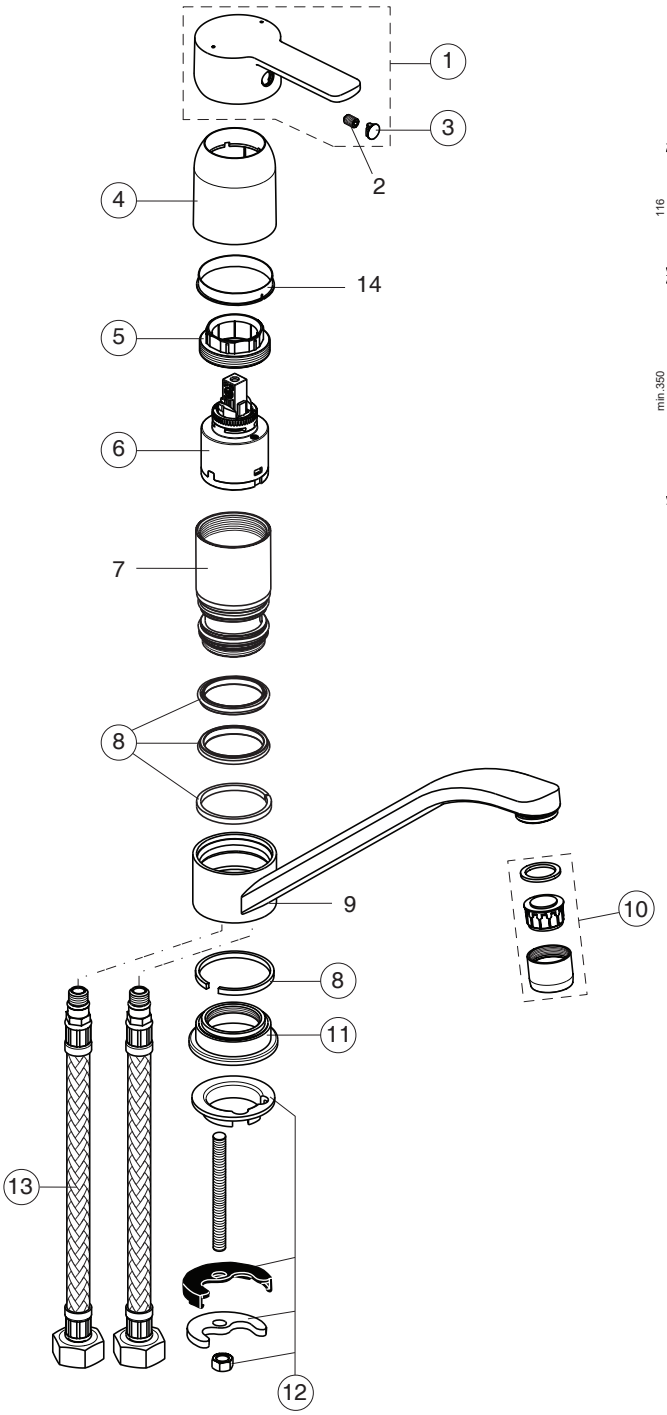

B0877AA

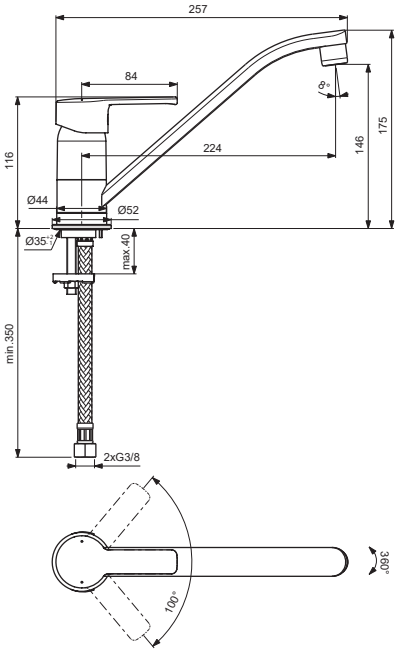

Pos.	Signify	Spare parts-Nr.	Quantity	Pos.	Signify	Spare parts-Nr.	Quantity
1	Lever,w/logo-compl.	B961239AA	1 Pcs.	14	Support ring		1 Pcs.
2	Screw M5x8		1 Pcs.				
3	Cap decorative	B960473AA	1 Pcs.				
4	Escutcheon	B961211AA	1 Pcs.				
5	Screw M37x1.5	B964698NU	1 Pcs.				
6	Cartridge Ø35mm	B961477NU	1 Pcs.				
7	Body diverter kitchen		1 Pcs.				
8	Sealing set	B961603NU	1 Pcs.				
9	Body-spout		1 Pcs.				
10	Perlator M22x1-B	B964945AA	1 Pcs.				
11	Rosette decorative	B961228AA	1 Pcs.				
12	Fixation kit	B964894NU	1 Set				
13	Flex hose G3/8 M10x1/8x12/L400	B960535NU	1 Pcs.				